arXiv:acc-phys/9503001v2 7 Apr 1995

A Study of Influence of Synchrotron Radiation Quantum Fluctuations on the Synchrotron Oscillations of a Single Electron Using Undulator Radiation

A.N. Aleshaev, I.V. Pinayev, V.M. Popik, S.S. Serednyakov,
T.V. Shaftan, A.S. Sokolov, N.A. Vinokurov, P.V. Vorob'ev

Budker Institute of Nuclear Physics, 11 Lavrentyev Ave., Novosibirsk, 630090, Russian Federation

Abstract

A single electron circulating in a storage ring is a very peculiar object. Synchrotron radiation quantum fluctuation causes stohastic process in the synchrotron oscillation of an electron. The radiation from a undulator permits one to obtain discret moments of longitudional electron motion. Experiments with a single electron on on the VEPP-3 optical klystrons are described.

1 Introduction

In the previous paper [1] we reported the results of the Brown-Twiss experiment with undulator radiation of a single electron circulated in a storage ring. It was found that the correlation length of photocounts is sufficiently less (actually, less than the time resolution of our equipment) than the "natural" bunchlength excited by the quantum fluctuations of synchrotron radiation. The interpretation of this result is the following: the length of localization of the electron is sufficiently less than the natural bunchlength. It was also indicated that the longitudinal coordinate of the electron oscillates with the synchrotron frequency.

In this paper we describe the investigation of the single electron longitudinal motion.

2 The experimental set-up

The layout of our installation is shown in the Fig. 1, 2. The electron circulates in the storage ring VEPP-3 with the revolution frequency $F_{rev} = 4.012$ MHz modulated

by the frequency of synchrotron oscillations $\Omega/2\pi$ (about 1 kHz). The light emitted by the electron in the undulator is detected by the photomultiplier. The pulses of photocounts pass through the discriminator-shaper. These pulses of a standard shape give start to the time-to-digital converter. The reference pulses phased with storage ring RF system coming with revolution frequency give stop to the converter. So, we measure the delay between the time when the electron enters to the undulator and the first reference pulse after this event. The average frequency of the photocounts (about 20 kHz) is less than the revolution frequency, therefore another circuit counts the number of revolution periods between the photocounts. The delay and the number of revolutions are writing into the memory of the intellectual CAMAC controller. Thus the result of measurements is the couple of arrays which comprises the dependence of delay on the revolution number. The small part of this dependence is shown in Fig. 3.

3 Preliminary data handling

To obtain more precize information about the electron dynamic, we have to exclude the errors from the experimental data. There are two sources of errors. First, uncorrelated photocounts, which are presents even in the absence of an electron. Second, the jitter of pulses at the output of discriminator-shaper caused by the statistical fluctuation of the shape of pulses from the photomultiplier. On the another hand, we know, that the dependence of the longitudinal coordinate s of an electron on time t is sinusoidal with slowly varying amplitude A and phase ϕ:

$$s = ct + A(t)sin(\Omega n/F_{rev} + \phi(t)) \tag{1}$$

where n is the revolution number, and c is speed of light.

Taking into account these circumstances we use the following algorithm of the filtering of the sequence of delays. We take the small part of sequence with the time duration T (typically we choose T about a few periods of the synchrotron oscillations). Using the least-squares method we obtain the amplitude and the phase of the fitting sinusoid and the rms error. After that we exclude from consideration all points with the deviation more than two rms errors. We repeat such least square fitting twice more, excluding about 15% of experimental points and obtain "clean" sequence (Fig. 4) with fitted amplitude and phase of oscillations.

To estimate the "optimal" value of the partial sequence duration T we used the consideration of the optimal filter for a sequence [2]. The least-squares procedure is actually the sort of filters and T^{-1} is the width of the filter. One can easily obtain the estimation for the optimal value of T

$$T_{opt} \approx \frac{\sigma}{A}\sqrt{\frac{\tau}{\nu}} \tag{2}$$

where σ is the rms error, τ is the longitudinal dumping time, ν is the frequency of photocounts. Actually we chose T few times more than for average amplitude. So, we lost in the resolution for large amplitudes, but decreased the noise dramatically for all amplitudes.

Applying such treatment to various partial sequences we obtain the time dependence of amplitude $A(t)$ and slow phase $\phi(t)$ on time (Fig. 5). The electron trajectory in the polar coordinates A, ϕ is shown in Fig. 6.

Let us discuss qualitatively some features of this trajectory. It looks continuous but non-differentiable. These properties are very natural for the Brownian motion. This view of trajectory indicates also, that our filtering algorithm provide a good suppression of noises (otherwise there would appear discontinuities) and rather broad band (otherwise the trajectory would be smooth). The motion is irregular except of large amplitudes where there is the regular rotation caused by the nonlinearity of synchrotron oscillations. The trajectory fills more or less homogeneously the central part of the phase plane except of the close vicinity of the origin point. This "small hole" in the phase space distribution may be caused by the fluctuations of the RF voltage (see below).

4 The correlation functions

The correlation functions for amplitude and phase are shown in Fig. 7, and Fig. 8, correspondingly. The characteristic durations are very different ($\approx$300 ms and $\approx$15 ms). Note that the correlation time for the amplitudes is almost equal to the damping time of the synchrotron oscillations. The short correlation time for phase may be also caused by the fluctuations of the RF voltage.

5 Observations of two electrons.

To separate the influence of the quantum fluctuations of radiation on an electron dynamics from the influence of another noises we performed the same experiment with two electrons in the storage ring. The "kicks" of the photon emission for two electrons are obviously uncorrelated, but "kicks" from noise of the RF and magnetic systems are correlated. The handling of the photocounts data is more complicated now and demands to perform the further investigations.

6 Conclusion

In the experiments described in this paper we demonstrated the stochastic behavior of the electron similar to the Brownian motion. But the phenomenon is sufficiently different from the last one as the temperature of the field oscillators which interacts with electron is equal to zero. In the reference system moving with electron the effective temperature proportional to its acceleration appears [3] and the interpretation becomes similar to the conventional consideration of thermal fluctuations.

References

[1] I.V. Pinayev, V.M. Popik, T.V. Shaftan, A.S. Sokolov, N.A. Vinokurov and P.V. Vorobyov, Nucl. Instr. and Meth., A341(1994), pp. 17–20.

[2] L.A. Vainstein and V.D. Zubakov. The reconstruction of a signal obscured by random noise, Moscow, Nauka, 1960.

[3] W. Unruh, Phys. Rev. vol. D 14, p. 870, 1976.

Figures Caption

Fig. 1 Layout of the installation

Fig. 2 Layout of the time interval measurement

Fig. 3 The small part of the measured dependence

Fig. 4 The procedure of the data cleaning

Fig. 5 Amplitude and phase of synchrotron oscillations

Fig. 6 Trajectory of single electron in phase coordinates

Fig. 7 The amplitude correlation

Fig. 8 The phase correlation

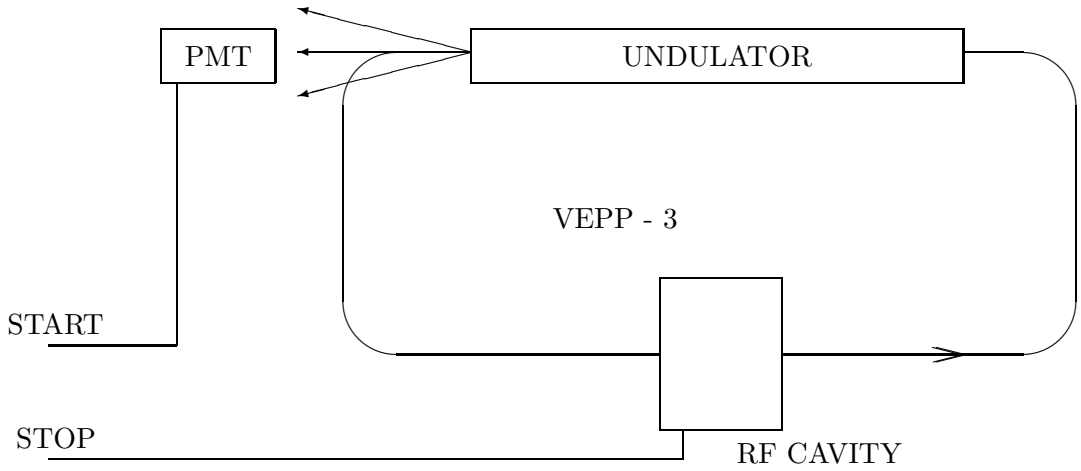
PMT
UNDULATOR
VEPP - 3
START
STOP
RF CAVITY

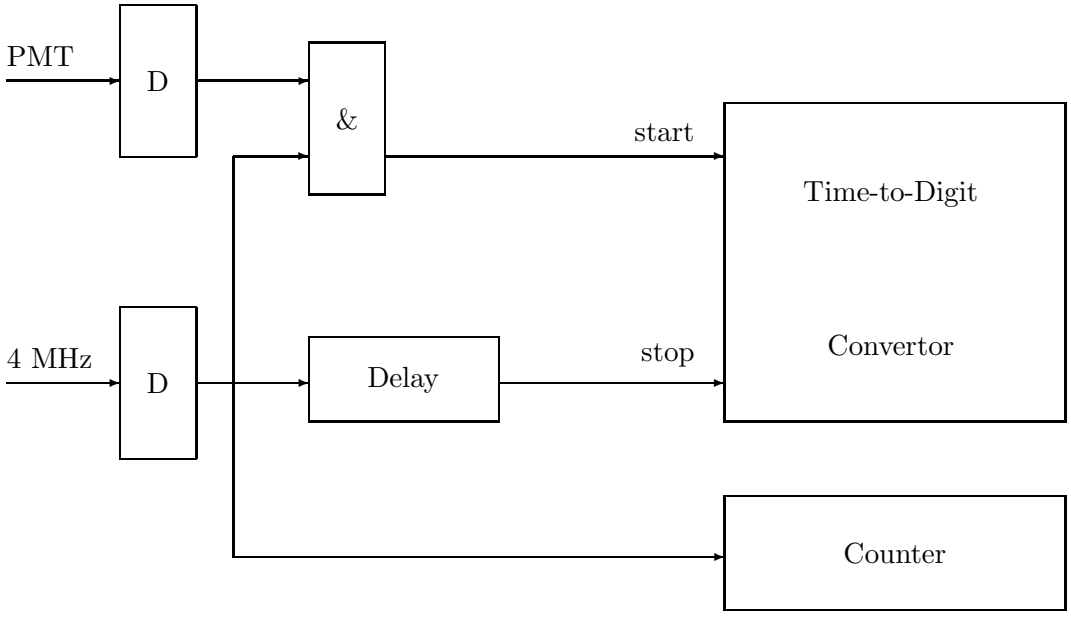
PMT
D
&
start
Time-to-Digit
4 MHz
D
Delay
stop
Convertor
Counter

This figure "i1.gif" is available in "gif" format from:

http://arXiv.org/ps/acc-phys/9503001v2

This figure "i2.gif" is available in "gif" format from:

http://arXiv.org/ps/acc-phys/9503001v2

This figure "i3.gif" is available in "gif" format from:

http://arXiv.org/ps/acc-phys/9503001v2

This figure "i4.gif" is available in "gif" format from:

http://arXiv.org/ps/acc-phys/9503001v2

This figure "i5.gif" is available in "gif" format from:

http://arXiv.org/ps/acc-phys/9503001v2

This figure "i6.gif" is available in "gif" format from:

http://arXiv.org/ps/acc-phys/9503001v2