arXiv:cond-mat/0304472v1 22 Apr 2003

# Spin-Voltaic Effect and its Implications

Igor Žutić
*Condensed Matter Theory Center, Department of Physics, University of Maryland, College Park, Maryland 20742*

Jaroslav Fabian
*Institute for Theoretical Physics, Karl-Franzens University, Universitätsplatz 5, 8010 Graz, Austria*

In an inhomogeneously doped magnetic semiconductor, an interplay between an equilibrium magnetization and injected nonequilibrium spin leads to the spin-voltaic effect–a spin analogue of the photo-voltaic effect. By reversing either the sign of the equilibrium magnetization or the direction of injected spin polarization it is possible to switch the direction of charge current in a closed circuit or, alternatively, to switch the sign of the induced open-circuit voltage. Properties of the spin-voltaic effect can be used to perform *all-electrical* measurements of spin relaxation time and injected spin polarization, as well as to design devices with large magnetoresistance and spin-controlled amplification.

Most of the existing applications using spin degrees of freedom in electronic systems exploit the magnetoresistive effects in magnetic nanostructures involving metals (paramagnetic and ferromagnetic) and insulators [1,2]. Considering semiconductors, on the other hand, offers flexibility in the doping and fabrication of a wide range of hetero- and nanostructures while the nonlinear current-voltage ($I-V$) characteristics are suitable for amplification and implementing logic. Even though many materials, in their ferromagnetic state, can have a substantial degree of *equilibrium* carrier spin polarization, this alone is usually not sufficient for spintronic applications [3], which typically require current flow and/or manipulation of the *nonequilibrium* spin (polarization). Since the early work on shining circularly polarized light [4,5] and driving electrical current [6] to generate nonequilibrium spin polarization in semiconductors, the challenge has remained to understand what the implications are of such nonequilibrium spin [7].

We illustrate here the influence of nonequilibrium spin on $I-V$ characteristics in magnetic $p$-$n$ junctions [8,9] magnetic analogues of ordinary $p$-$n$ junctions [11], and focus on the implications of the spin-voltaic effect [8–10]. Related phenomena of the spin-charge coupling [12,13] were introduced in metallic heterostructures by Silsbee and Johnson, following the theoretical proposals for electrical spin injection of Aronov and Pikus [14,15] (a recent account of electrical spin injection and a detailed list of references is given in [16,17]). In the context of semiconductors there is a long tradition of optically generating (for example, by shining circularly polarized light) spin-polarized carriers and spin-dependent electromotive force (spin emf) [18], reviewed in [19,20]. Both incoherent [21,22] and coherent [23,24] optical generation of spin currents have been demonstrated. In an applied magnetic field and using quantum point contacts, electrical spin injection and detection in semiconductor quantum dots [25] have been shown to have properties similar to spin-charge coupling [12,13].

Magnetic $p$-$n$ junctions, which could demonstrate the spin-voltaic effect, have spatially dependent spin splitting

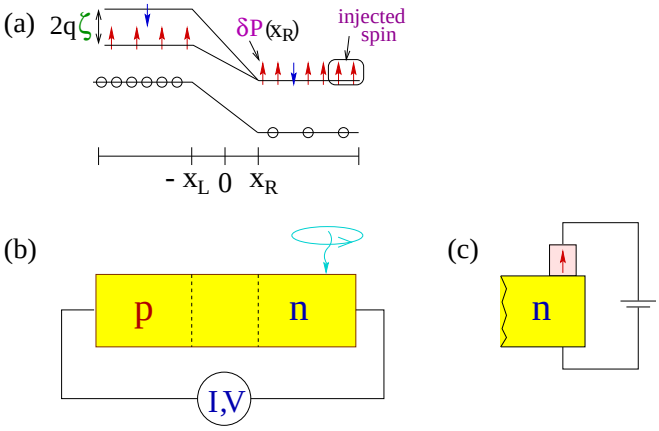


FIG. 1. Scheme of a magnetic $p$-$n$ junction. (a) Band-energy diagram with spin-polarized electrons (arrows) and unpolarized holes (circles). The spin splitting $2q\zeta$, the nonequilibrium spin polarization at the depletion region edge $\delta P(x_R)$, and the region where the spin is injected are depicted. (b) Circuit geometry corresponding to panel (a). Using circularly polarized light (photo-excited electron-hole pairs absorb the angular momentum carried by incident photons), nonequilibrium spin is injected transversely in the nonmagnetic $n$ region and the circuit loop for $I-V$ characteristics is indicated. Panel (c) indicates an alternative scheme to electrically inject spin into the $n$ region.

of carrier bands–a consequence of doping with magnetic impurities and/or an applied magnetic field $B$. Such a spin splitting can be realized using ferromagnetic semiconductors [26] or paramagnetic semiconductors in finite $B$ (where either the magnitude of $B$ or the $g$-factor is spatially inhomogeneous). For simplicity, we address here the second realization, depicted in Fig. 1.

In the low injection regime it is possible to obtain the results for spin-polarized transport analytically and to decouple the contribution of electrons and holes [9]. In the $p$ ($n$) region there is a uniform doping with $N_a$ acceptors ($N_d$ donors). Within the depletion region ($-x_L < x < x_R$), we assume that there is a spatially dependent spin splitting of the carrier bands. Zeeman

splitting of the conduction band can be expressed as $2q\zeta = g\mu_B B$, where $g$ is the $g$-factor for electrons, $\mu_B$ is the Bohr magneton, $q$ is the proton charge, and $\zeta$ is the electron magnetic potential [8]. In contrast to metals, the magnitude of the $g$-factor can be significantly different from the free electron value, exceeding 500 in $Cd_{0.95}Mn_{0.05}Se$ at low temperature [27] and attaining $\approx$ 50 in InSb at room temperature. We further assume that the carriers obey the nondegenerate Boltzmann statistics and consider only the effect of spin-polarized electrons (the net spin polarization of holes can also be simply included [9]). The product of electron (n) and hole (p) densities in equilibrium (denoted with subscript "0") is modified from the nonmagnetic $p$-$n$ junction as [8]

$$n_0 p_0 = n_i^2 \cosh(\zeta/V_T) \tag{1}$$

where $n_i$ is the intrinsic (nonmagnetic) carrier density and $V_T = k_B T/q$, with $k_B$ the Boltzmann constant and $T$ temperature. In a nonmagnetic $p$-$n$ junction charge current $J$ can be decomposed into electron and hole contributions $J = J_n + J_p$, which in turn are proportional to the density of the nonequilibrium minority carriers, $J_n \propto \delta n_L = n - n_0 = n_0[\exp(V/V_T) - 1]|_{x=x_L}$, $J_p \propto \delta p_R = p - p_0 = p_0[\exp(V/V_T) - 1]|_{x=x_R}$, evaluated at the two edges of a depletion region [11], and $V$ is the applied bias. For a magnetic $p$-$n$ junction, Eq. 1 implies that in the regime $\zeta > V_T$, the density of minority electrons changes exponentially with $B$ ($\propto \zeta$) and can give rise to exponentially large magnetoresistance [8,9]. Furthermore in the $n$-$p$-$n$ magnetic bipolar transistor [28], from applying Eq. 1 to the base $p$-region, it follows that the current amplification also varies exponentially with $B$.

Before discussing the implications of the injected nonequilibrium spin in a magnetic $p$-$n$ junction (depicted in Fig. 1), it is helpful to recall two simpler situations. Consider first the usual photo-voltaic effect in a nonmagnetic $p$-$n$ junction ($\zeta \equiv 0$) illuminated entirely by unpolarized light. Photo-generated electron and holes will be swept away in opposite directions by the built-in electric field in the depletion region. This departure from the equilibrium carrier densities (prior to the illumination) shifts the balance of the electron and hole currents which no longer add up to zero. If the leads are connected to the two ends of a $p$-$n$ junction, a reverse charge current will flow. Conversely for an open circuit configuration, photo-generated carriers suppress the built-in field and create a net (open circuit) voltage measured at the two terminals. An analogous illumination by circularly polarized light can serve as a source of spin-polarized current–a spin-polarized solar cell [29]. However, while changing the degree of circularly polarized light (say, by reversing the helicity of an incident light) changes the degree of current spin polarization [29], there are no changes in $I - V$ characteristics–the nonequilibrium spin does not affect the charge properties.

In a magnetic $p$-$n$ junction carrier spin polarization $P = s/n$, the ratio of the spin $s = n_\uparrow - n_\downarrow$ and electron density ($n = n_\uparrow + n_\downarrow$), can be changed from the equilibrium value $P_0 = \tanh(\zeta/V_T)$ by shining circularly polarized light or by direct electrical spin injection as depicted in Fig. 1 (a) and (b), respectively. With the spatially dependent spin splitting, charge current will acquire an additional component–the spin-voltaic current $J_{sv}$ caused by the nonequilibrium spin [8]. In the spin-voltaic effect the nonequilibrium spin, by diffusion (and drift) from the point where it is generated to the edge of depletion region [$\delta P_R \neq 0$, see Fig. 1(a)], disturbs the balance between the generation and recombination currents (Fig. 1) [8,9]. If $\zeta > 0$, and more spin up electrons are present at $x_R$ ($\delta P_R > 0$), the barrier for them to cross the region is smaller than the barrier for the spin down electrons, so more electrons flow from $n$ to $p$ than from $p$ to $n$, and positive charge current results. If there are more spin down electrons at $x_R$ ($\delta P_R < 0$), the current is reversed. In an open circuit geometry with a reversal of injected spin polarization ($\delta P_R \to -\delta P_R$) [30] the sign of the induced voltage will be switched [9], characteristic also for spin-charge coupling [12,13] and the electrical detection of injected spin in quantum dots [25]. An equivalent change of the sign for $J_{sv}$ and the open circuit voltage can be realized by reversing the equilibrium magnetization i.e. $\zeta \to -\zeta$ and, correspondingly, $P_{0L} \to -P_{0L}$. Such a reversal can be achieved by changing $B \to -B$ in the paramagnetic case, or by temporarily applying a finite $B$ to flip the magnetization of a ferromagnetic region (in metallic multilayers this is feasible even at small fields $< 10$ G [1]). The total charge current can be expressed as spin equilibrium parts $J_n$ and $J_p$ and the spin-voltaic current $J_{sv}$ generated by the nonequilibrium spin [10]

$$J_{sv} \propto n_{0R} P_{0L} \delta P_R e^{V/V_T}, \tag{2}$$

which, unlike $J_{n,p}$, can remain finite even as $V \to 0$, when $J \to J_{sv}$ [8]. The product of the equilibrium magnetization and the nonequilibrium injected spin or, equivalently, $P_{0L}\delta P_R$ also enters directly the current amplification in a magnetic bipolar transistor [28], which can be tuned by the controlling the spin-voltaic effect. Furthermore, Eq. 2 shows the sensitivity of $J_{sv}$ to spin relaxation since $\delta P_R$ depends on the effective distance $d$ between the point of spin injection and the depletion region edge $x_R$ [10]. The decay of the corresponding nonequilibrium spin can be characterized by the spin relaxation time $T_1$ and the corresponding length scale, the spin diffusion length $L_{sn} = \sqrt{D_n T_1}$, where $D_n$ is the electron diffusivity [29]. Figure 2 illustrates how the sensitivity of $J_{sv}$ to spin relaxation could be used to perform all-electrical measurements of $T_1$ [10]. Consider an idealized situation where the injected spin is completely polarized. A long $T_1$ implies that the injected spin polarization will not be reduced at the depletion region edge, as shown in Fig. 2(a). The spin up electrons will then be easily

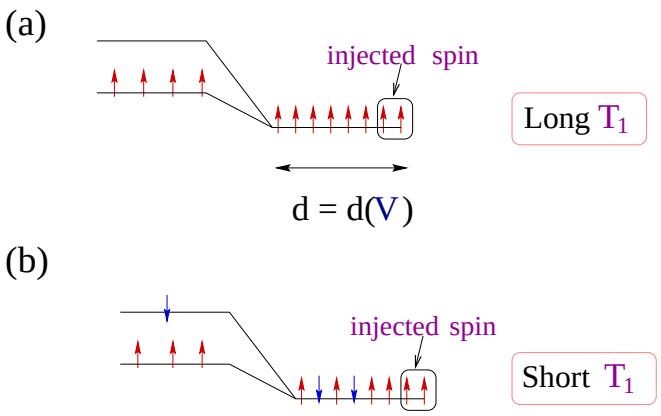


FIG. 2. Schematic representation of a conduction band in a magnetic $p$-$n$ junction. Spin relaxation of the injected spin is depicted in the limits of (a) long and (b) short spin relaxation time $T_1$. Applied bias $V$ changes the width of the depletion region and therefore changes the effective length between the injected spin and the depletion region edge.

transfered across the lower barrier in the depletion region, leading to large $J_{sv}$. In contrast, for a short $T_1$ sketched in Fig. 2(b), some of the injected spin up electrons will have their spin flipped. Those spin down electrons would go across the higher barrier (suppressed by $\propto \exp(\zeta/V_T)$ within the Boltzmann statistics as compared to the transfer of spin up electrons) and $J_{sv}$ is reduced. While these two limiting cases indicate that is possible to extract an unknown $T_1$ from $J_{sv}(T_1)$ at finite bias the total charge current $J$ could be dominated by $J_n$ and $J_p$–a large $T_1$-independent background ($J_{n,p}$ do not contain the nonequilibrium spin). It is therefore useful to use the symmetry properties of the individual contributions to the charge current with respect to the applied magnetic field [10]

$$J_{n,p}(-B) = J_{n,p}(B), \quad J_{sv}(-B) = -J_{sv}(B), \qquad (3)$$

recalling that $\zeta \propto B$. Consequently, $I-V$ characteristics can be used to extract the $T_1$ and the degree of the injected spin polarization by measuring $J(V,B) - J(V,-B) = 2J_{sv}$ [10], where the large $T_1$-independent background has then been effectively removed. By adapting this procedure to the parameters of GaAs it was shown that a variation of an unknown $T_1$ by an order of magnitude would give a change of approximately two orders of magnitude in $J_{sv}$ [10] and the spin relaxation time could be extracted from measured I-V curves.

To simplify the presentation, we have focused on a particular implementation of the spin-voltaic effect. Analytical results for a low injection regime, where $V < V_T ln(N_a N_d/n_i^2)$–the built-in potential [11], are also available in other cases [9]. For example, when both $p$ and $n$ regions are magnetic, the spin-voltaic current in Eq. 2 should be modified by replacing $P_{0L} \to (P_{0L} - P_{0R})/(1 - P_{0R}^2)$. At higher applied bias, the corresponding problem can be solved numerically by self-consistently combining Poisson's and the appropriate continuity equations for spin and charge densities [8].

A materials realization of the spin-voltaic effect, similar to the usual photo-voltaic effect, is not limited to $p$-$n$ junction, and can also include heterojunctions and structures with Schottky barriers. Even though most of the currently studied ferromagnetic semiconductors [26], such as (Ga,Mn)As and (In,Mn)As, are $p$-doped with spin-polarized electrons rather then holes, they still have a spin splitting in the conduction band as depicted in Fig. 1(a), and could be suitable for the implementation of the spin-voltaic effect.

We thank S. Das Sarma and H. Munekata for useful discussions. This paper is based on the presentation at the International Workshop on Nanostructured Metallic Materials sponsored by Nanotechnology Research Network Center of Japan and Tohoku University Materials Research Center. This work was supported by DARPA, NSF-ECS, and the US ONR.

[1] S. Maekawa and T. Shinjo (Eds.), *Spin Dependent Transport in Magnetic Nanostructures* (Taylor and Francis, New York 2002).
[2] G. Prinz, *Science* **282**, 1660 (1998).
[3] S. Das Sarma, J. Fabian, X. Hu, and I. Žutić, Solid State Commun. **119**, 207 (2001); IEEE Transaction on Magnetics **36**, 2821 (2000); Superlattice Microst. **27**, 289 (2000).
[4] G. Lampel, Phys. Rev. Lett. **20**, 491 (1968).
[5] R. R. Parsons, Phys. Rev. Lett. **23**, 1152 (1969).
[6] W. G. Clark and G. Feher, Phys. Rev. Lett. **10**, 138 (1963).
[7] In general, the nonequilibrium spin is not limited just to the carriers (electrons and holes in semiconductors) but includes also the spin of excitations and nuclei.
[8] I. Žutić, J. Fabian, and S. Das Sarma, Phys. Rev. Lett. **88**, 066603 (2002).
[9] J. Fabian, I. Žutić, and S. Das Sarma, Phys. Rev. B **66**, 165301 (2002).
[10] I. Žutić, J. Fabian, and S. Das Sarma, Appl. Phys. Lett. **82**, 221 (2003).
[11] N. W. Ashcroft and N. D. Mermin, *Solid State Physics* (Saunders, New York, 1976).
[12] R. H. Silsbee, Bull. Magn. Reson. **2**, 284 (1980).
[13] M. Johnson and R. H. Silsbee, Phys. Rev. Lett. **55**, 1790 (1985); Phys. Rev. B **35**, 4959 (1987).
[14] A.G. Aronov and G.E. Pikus, Fiz. Tekh. Poluprovodn. **10** , 1177 (1976) [Sov. Phys. Semicond. **10**, 698 (1976)].
[15] A. G. Aronov, JETP Lett. **24**, 32 (1976).
[16] E. I. Rashba, Eur. Phys. J. B **29**, 513 (2002).
[17] S. Takahashi and S. Maekawa, Phys. Rev. B **67**, 052409 (2003).
[18] M.I. D'yakonov and V.I. Perel', Pis'ma Zh. Eksp. Teor. Fiz. 13, 657 (1971) [JETP Lett. 13, 467 (1971)].
[19] F. Meier and B.P. Zakharchenya (Eds.), *Optical Orientation* (North-Holland, New York, 1984).
[20] E. L. Ivchenko and G. E. Pikus, *Superlattices and Other*

*Heterostructures, Symmetry and Optical Phenomena, 2nd Ed.* (Springer, New York, 1997).

[21] S.D. Ganichev, E.L. Ivchenko, S.N. Danilov, J. Eroms, W. Wegscheider, D. Weiss, and W. Prettl, Phys. Rev. Lett. 86, 4358 (2001).

[22] S. D. Ganichev, E. L. Ivchenko, V. V. Belkov, S. A. Tarasenko, M. Sollinger, D. Weiss, W. Wegschelder, and W. Prettl, *Nature* **417**, 153 (2002).

[23] R. D. R. Bhat and J. E. Sipe, Phys. Rev. Lett. **85**, 5432 (2000).

[24] M. J. Stevens, A. L. Smirl, R. D. R. Bhat, J. E. Sipe, and H. M. van Driel, J. Appl. Phys. **91**, 4382 (2002).

[25] R. M. Potok, J. A. Folk, C. M. Marcus, and V. Umansky, Phys. Rev. Lett. **89**, 266602 (2002); J. A. Folk and J. A. Folk, R. M. Potok, C. M. Marcus, and V. Umansky, *Science* **299**, 679 (2003).

[26] H. Munekata, H. Ohno, S. von Molnár, A. Segmüller, L. L. Chang, and L. Esaki, Phys. Rev. Lett. **63**, 1849 (1989); H. Ohno, H. Munekata, T. Penney, S. von Molnár, and L. L. Chang, Phys. Rev. Lett. **68**, 2664 (1992); H. Ohno, Science **281**, 951 (1998); Y. D. Park, A. T. Hanbicki, S. C. Erwin, C. S. Hellberg, J. M. Sullivan, J. E. Mattson, T. F. Ambrose, A. Wilson, G. Spanos, and B. T. Jonker, *Science* **295**, 651 (2002); H. Saito, W. Zaets, S. Yamagata, Y. Suzuki, and K. Ando, J. Appl. Phys. **91**, 8085 (2002); S. J. Pearton, C. R. Abernathy, M. E. Overberg, G. T. Thaler, D. P. Norton, N. Theodoropoulou, A. F. Hebard, Y. D. Park, F. Ren, J. Kim, and L. A. Boatner, J. Appl. Phys. **93**, 1 (2003).

[27] T. Dietl, in *Handbook of Semiconductors* Vol. 3, edited by T. S. Moss and S. Mahajan, p. 1279 (Noth-Holland, New York, 1994).

[28] J. Fabian, I. Žutić, and S. Das Sarma, preprint cond-mat/0211639.

[29] I. Žutić, J. Fabian, and S. Das Sarma, Phys. Rev. B **64**, 121201 (2001); Appl. Phys. Lett. **79**, 1558 (2001).

[30] For example, by reversing the helicity of the illuminating light in Fig. 1(b).