arXiv:cond-mat/0408065v1 [cond-mat.mes-hall] 3 Aug 2004

DIRECT MEASUREMENTS OF TUNABLE JOSEPHSON PLASMA RESONANCE IN THE L-SET

Mika A. Sillanpää, Leif Roschier, and Pertti J. Hakonen
Low Temperature Laboratory, Helsinki University of Technology
Otakaari 3 A, Espoo P.O.Box 2200 FIN-02015 HUT Finland

Abstract Phase dynamics has been measured in a driven mesoscopic Josephson oscillator where the resonance is tuned either by magnetic flux or by gate charge modulation of the Josephson inductance. Phenomena are analyzed in terms of a "phase particle picture", and by numerical circuit simulations. An analogy to switching of a DC-biased junction into voltage state is discussed. Operation principle of the recently demonstrated Inductive Single-Electron Transistor (L-SET) based on the driven oscillator is reviewed. The obtained charge sensitivity implies that a performance comparable to the best rf-SETs has already been reached with the novel device.

1. INTRODUCTION

Quantum measurement in the solid state has been shown to be feasible as several impressive realizations of qubits based on mesosocopic superconducting tunnel junctions have emerged [1–4]. Sensitive measurement of physical quantities close to the limit set by the uncertainty principle is, on the other hand, an important issue in its own right.

The Single-Electron Transistor (SET) is a basic mesoscopic detector, sensitive to electric charge on a gate capacitor. In order to gain advantage of the inherently large bandwidth $(R_{SET}C_{\Sigma})^{-1} \sim 10$ GHz of the SET charge detector, basically two new technologies have been developed where the SET is read using an LC oscillator built from "macroscopic" components but coupled directly to it. The "rf-SET" (Radio-Frequency SET) [5] is based on gate modulation of the Q-value of the oscillator.

Because of limitations due to the dissipative nature of the rf-SET, a principally non-dissipative "L-SET" (Inductive SET) technique has been developed very recently [6]. The L-SET is based on reactive readout of the Josephson inductance of a superconducting SET (SSET) in a resonator configuration [7]. Due to correlated Cooper pair tunneling, it does not exhibit shot noise or excessive dissipation.

In this paper we first review the operating principle of the L-SET charge detector. Then we concentrate on discussing classical dynamics of the phase φ under the microwave drive, and we present new experimental data. In particular, we discuss dynamical effects in the L-SET resonator which resemble the switching of a DC-biased Josephson junction into voltage state by drive or noise.

2. THE L-SET CIRCUIT

In the absence of DC bias voltage, a SSET has the Hamiltonian

$$H = \frac{(q - q_g)^2}{2C_\Sigma} - 2E_J \cos(\varphi/2)\cos(\theta), \tag{1}$$

where q_g is the gate charge, and φ is the phase difference across the SSET, assumed to be a classical variable here due to an environment having impedance much smaller than $R_Q \simeq 6.5$ kΩ. E_J is the single-junction Josephson energy, and the charging energy is related to sum capacitance by $E_C = e^2/(2C_\Sigma)$. Eigenvalues of this well-known Hamiltonian form bands $E_n(\varphi, q_g)$ (see Fig. 1).

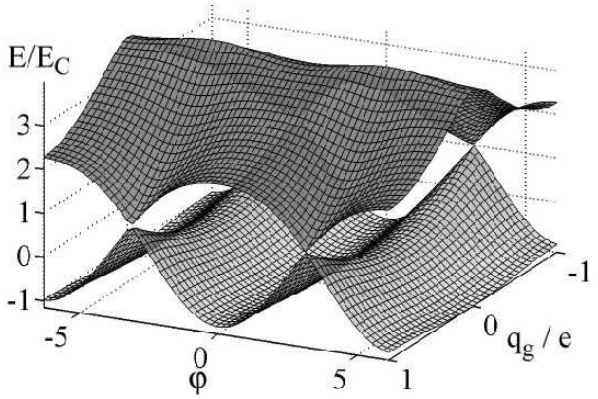

Figure 1. Two lowest bands $n = 0$ and $n = 1$ from Eq. 1 for $E_J/E_C = 1.7$ (sample 2) plotted as function of the gate charge q_g and the phase φ across the SSET.

At the lowest band $n = 0$, the energy E_0 increases approximately quadratically as a function of the phase φ when moved to either direction from the minimum at $\varphi = 0$. This type of dependence is characteristic of an inductor. The effective Josephson inductance of the SSET is then

$$L_J^* = \frac{\Phi_0^2}{2\pi}(E_J^*)^{-1}, \tag{2}$$

where the Josephson coupling has the effective value

$$E_J^* = \frac{\partial^2 E_0(q_g, \varphi)}{\partial \varphi^2}. \tag{3}$$

Here, $\Phi_0 = h/(2e)$ is the flux quantum.

Since the energy band, and consequently, the inductance, depend on the gate charge q_g, the L-SET electrometer is built so that the resonance frequency of an LC tank circuit connected to a SSET is tunable by q_g. This allows in principle a purely reactive readout.

The L-SET circuit we use is shown in Fig. 2 where the SSET is coupled in parallel to an LC oscillator resonant at the frequency $f_0 = 1/(2\pi)(LC)^{-1/2}$, roughly at 600 MHz. The total system has the gate-dependent plasma resonance at $f_p = 1/(2\pi)(L_{tot}C)^{-1/2} > f_0$, where $L_{tot} = L \parallel L_J^*$. The bandwidth $\Delta f \simeq f_p/Q_e$, where Q_e is the coupled quality factor, is typically in the range of tens of MHz.

The resistor r in series with the SSET is a model component for dissipation. As compared to the more standard way of drawing a resistor in parallel with the resonator, we got here a better agreement with the non-linear dynamics (see section 1.6.3).

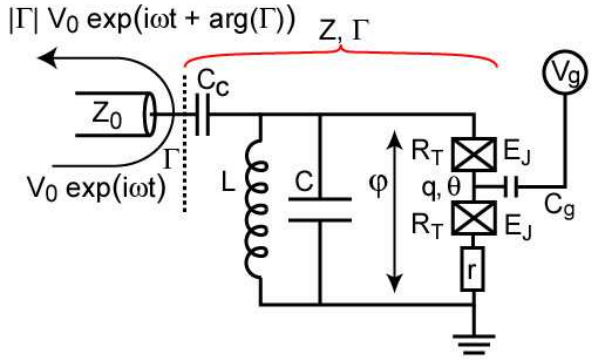

Figure 2. Schematics of the L-SET resonance circuit coupled to microwave feedline. The resonance is read by measuring amplitude or phase of the reflection coefficient $\Gamma = (Z - Z_0)/(Z + Z_0)$, where $Z_0 = 50\Omega$, and $Z(L_J^*)$ is the resonator impedance (including C_c).

Charge detection is performed by measuring a change of amplitude or phase of the voltage reflection coefficient Γ, when the setup is irradiated by mi-

crowaves of frequency roughly f_p. In the best sample so far [8], we have measured charge sensitivity $3 \times 10^{-5}\mathrm{e}/\sqrt{\mathrm{Hz}}$ over a bandwidth of about 100 MHz.

3. PLASMA OSCILLATIONS IN L-SET

Dynamics of the L-SET oscillator can be analyzed in terms of a potential $E_p = E_n(\varphi, q_g) + E_L$ due to the Josephson inductance and the shunting L, respectively, at the ground band approximately

$$E_p = -E_0(q_g)\cos(\varphi) + \Phi_0^2/(8\pi^2 L)\varphi^2. \quad (4)$$

At small oscillation amplitude, the phase particle experiences harmonic oscillations around $\varphi = 0$, whose frequency f_p is controlled by gate-tuning of the Josephson inductance (Fig. 3 (a)). This mode of operation, where the L-SET works as a charge-to-frequency converter, is the "harmonic mode".

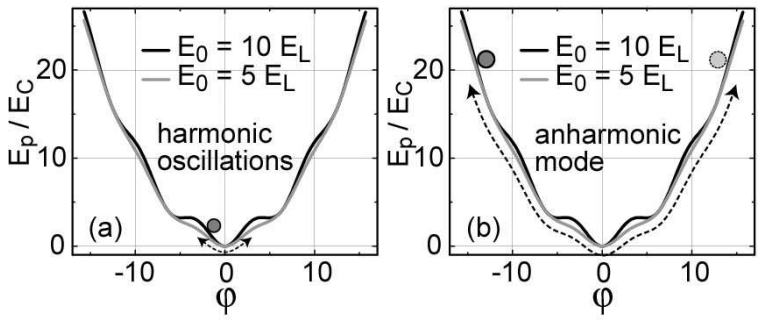

Figure 3. Illustration of the fictitious phase particle in a sinusoidally modulated parabolic potential.

Once the oscillation amplitude is increased close to the critical current at $\varphi = \pm\pi/2$, the $\cos(\varphi)$ term changes the local curvature of the potential, and hence, the resonance frequency changes. At very high amplitude, Fig. 3 (b), the cosine wiggle becomes averaged out. Thus, we expect a change of resonant frequency from f_p to f_0 roughly at an AC current of critical current magnitude. This change of resonance frequency when the sample is probed by *critical power* P_c is reminiscent of a DC-biased Josephson junction switching into a voltage state [9].

At large excitations above P_c, the highly nonlinear oscillator experiences complicated dynamics which does not in general allow analytical solutions. Numerical calculations over a large range of parameters, however, show consistently that the system response depends on L_J^* also in this case [8]. This

mode of operation of the L-SET charge detector we call the "anharmonic" mode.

4. SIMULATION SCHEME

We simulated the transition from linear to non-linear oscillations in the L-SET circuit with the Aplac circuit simulation program which contains an implementation of a Josephson junction element. The SSET was modeled as a single tunable junction. We used the method of harmonic balance where amplitudes of the first and three upper harmonics were optimized to create an approximate solution. Screenshot of the simulation schematics is shown in Fig. 4.

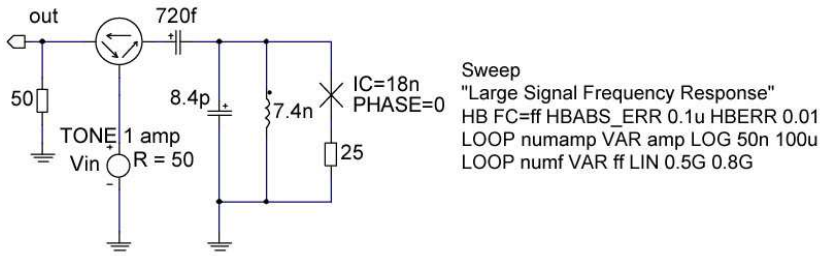

Figure 4. Screenshot from Aplac program used to simulate classical dynamics in the L-SET circuit (to aid convergence, we also used 1 kΩ across the SSET).

5. EXPERIMENT

The measurements were done in a powerful Leiden Cryogenics MiniKelvin dilution refrigerator. At the base temperature of 20 mK, we used a microwave circulator which had about 20 dB backward isolation to cut back-action noise from the 4 Kelvin preamplifier [10].

The reflected probing excitation was amplified with a chain of amplifiers having a total of 5 K noise temperature, and detected with a network analyzer or a spectrum analyzer.

We studied two samples (Table 1 and Fig. 5) where sample 1 had a tunable E_J. Since it had $E_C \simeq k_B T$, where the temperature was probably set by leakage through the circulator, its response had a hardly detectable gate modulation. Accordingly, we were able to study the plasma resonance in an almost classical junction.

Sample 2 (discussed in Ref. [6], see section 1.6.1) was a sensitive detector, with a 15 MHz gate shift of the resonance frequency.

Table 1. Parameters of the two samples and of their tank LC oscillators as discussed in the text. $E_J = h\Delta/(8e^2\frac{1}{2}R_{SET})$ is the single-junction Josephson energy, and $E_C = e^2/(2C_\Sigma)$ is the charging energy. For sample 1, SQUID structure of the individual SET junctions allowed tuning of the E_J/E_C ratio.

sample	R_{SET} (kΩ)	E_J (K)	E_C (K)	L_J^* (nH)	L (nH)	C (pF)	C_c (pF)	Q_e
1	4.2	3.5 ... 0	0.17	6	3	23	0.72	13
2	9.6	1.6	0.92	16	7.4	8.4	0.72	18

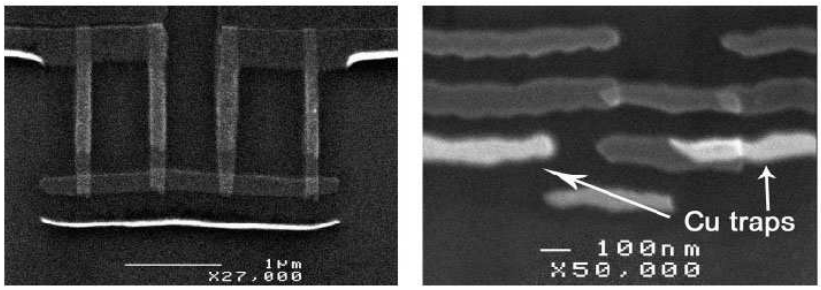

Figure 5. SEM micrographs of the samples discussed; sample 1 with SQUID junctions (left), and sample 2 (right) which had quasiparticle traps which were in contact to the electrodes 5μm from junctions.

6. RESULTS AND DISCUSSION

6.1 CHARGE DETECTION

For sample 2, $E_C \gg k_BT$, and hence, phase was properly localized in the potential. Accordingly, we got a rather good agreement for gate modulation of the resonance frequency (Fig. 6), where the resonance moves 15 MHz with respect to gate charge. This agrees well with the expectation of only 15 % modulation of L_J^* based on the rather high $E_J/E_C \simeq 1.7$ of this sample. The minimum (w.r.t. gate) of L_J^*, fitted best with 18 nH is about 20 % higher than expected. This is probably due to a small amount of phase noise, or partially due to inaccuracies in determination of the parameters.

Charge sensitivity was measured using amplitude readout. In the harmonic mode we got $s_q = 2.0\times10^{-3}\mathrm{e}/\sqrt{\mathrm{Hz}}$ at the maximum power $P_c \simeq -116$ dBm, corresponding to 20 fW dissipation in the whole resonator circuit. Note that due to Cooper pair tunneling, the power is not dissipated in the SSET island. In the anharmonic mode, significantly better sensitivity of $s_q = 1.4\times10^{-4}\mathrm{e}/\sqrt{\mathrm{Hz}}$ was obtained.

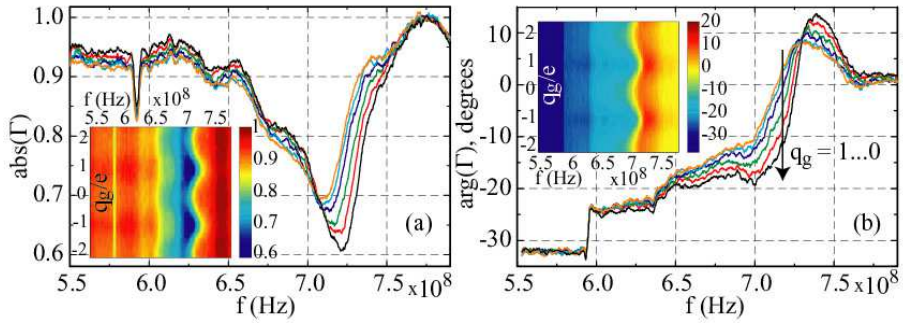

Figure 6. Sample 2; measured frequency response at -125 dBm for successive gate values $q_g/e = 1 \ldots 0$, (a) amplitude, (b) phase. The insets portray the complete $2e$ periodicity [6].

In the best sample so far [8], having $E_J/E_C \simeq 0.3$ we have measured $3\times10^{-5}\mathrm{e}/\sqrt{\mathrm{Hz}}$ over a bandwidth of about 100 MHz. This kind of performance is comparable to the best rf-SET's [11], though power dissipation is more than two orders of magnitude lower.

6.2 HARMONIC OSCILLATIONS

In Fig. 7 we plot data from sample 1 which behaves almost as a classical junction with negligible charging effect. By applied magnetic flux we tune simultaneously E_J of both SQUID-shaped junctions of the SSET, and hence, L_J^*. Periodicity of the resonance frequency with respect to applied magnetic flux is evident.

A prominent feature in Fig. 7 is the absence of reflected signal at "critical" points where the resonance frequency switches to f_0. This implies a strong dissipation which is visible as coupling to Z_0. Pronounced dissipation at the critical points is representative of strong fluctuations at the artificial "phase transition" points.

In Fig. 8 we plot f_p measured at a low excitation, roughly 1/10 of critical current peak amplitude. The data are fitted to theoretical flux Φ modulation of L_J^*. A symmetric SQUID has been assumed, where $E_J \propto \cos(\pi\Phi/\Phi_0)$ which affects the E_J/E_C ratio and thus L_J^* (see Eqs. 2 and 3). It is clear that something else is happening at low E_J, where the resonance meets f_0 more rapidly than expected. Rounding of the cusp in experimental data cannot be explained by asymmetry in the SQUIDS either, since then the resonance would deviate from true f_0 which is not the case.

We argue this effect is due to "premature switching" caused by noise in the oscillator. The effect is again in analogy to physics in a DC-biased junction, namely, noise-induced switching and delocalization of phase. In contrast to

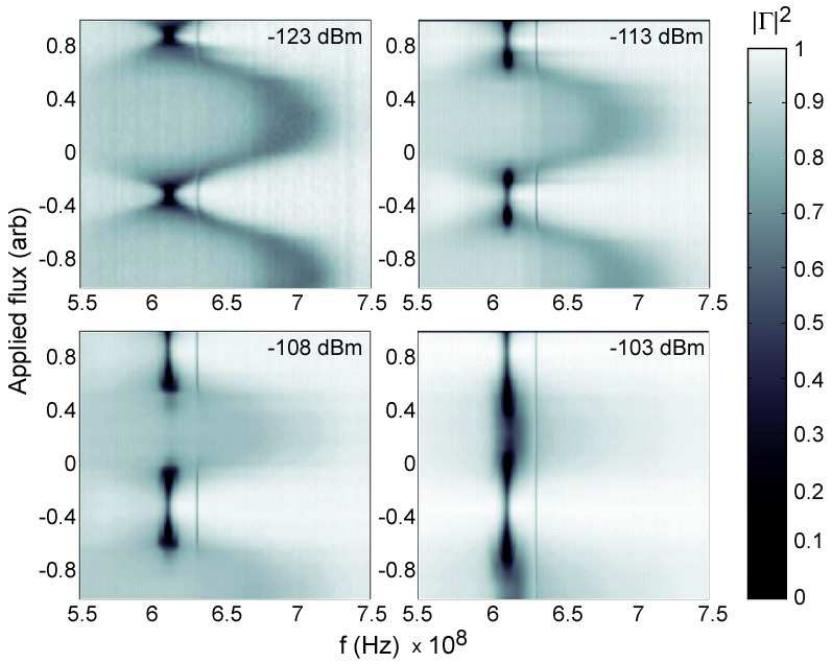

Figure 7. Flux modulation of the power reflection ($|\Gamma|^2$) for sample 1 in order of increasing probing excitation (the graph labelled -103 dBm corresponds approximately to critical power P_c at maximum E_J).

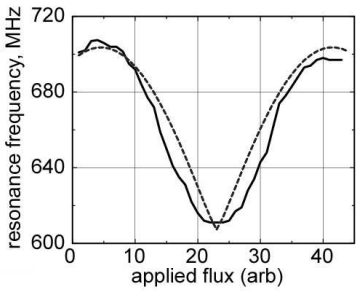

Figure 8. Measured resonance frequency for sample 1 extracted from the first graph in Fig. 7 (-123 dBm). The dotted line is a fit based on bare flux modulation of the E_J/E_C ratio.

running of phase in a tilted washboard, the average of phase stays at zero in our case. Noise-induced switching happens when peak phase fluctuations reach $\varphi_c \simeq \pi/2$. This condition corresponds to random motion of the phase particle at the bottom of the potential of Fig. 3 (a) with rms amplitude $\sim \varphi_c/2.5$.

Noise excites the phase particle in the potential E_p given by Eq. 4 up to an energy $E_p = k_B T_{eff}$, where T_{eff} is the electron temperature set by noise. Thus, approximately $k_B T_{eff} = \Phi_0^2(\varphi_c/2.5)^2/(8\pi^2 L_{tot})$. Since in Fig. 8 the switching happens at the flux $\simeq 0.8 \times \pi\Phi_0/2$, we get an estimate $T_{eff} \simeq 0.5$ K which is likely caused by leakage outside the band of the circulator.

6.3 SWITCHING AND NONLINEAR OSCILLATIONS

In this section, the discussion is based on experimental data from sample 2. In Fig. 9, at $P_c \simeq -116$ dBm, the resonant frequency switches from the broad plasma resonance, centered at 720 MHz, into a narrower tank resonance at 613 MHz. The wavelike texture at $-105 \ldots -90$ dBm is due to the $\cos(\varphi)$ Josephson-potential.

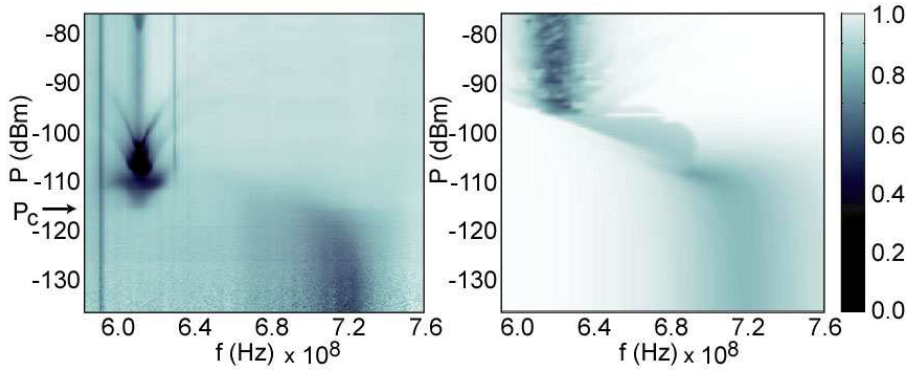

Figure 9. Measured frequency response ($|\Gamma|$, left) for sample 2 as a function of excitation power. "Critical power" P_c (see text) is marked. Gate DC level was tuned approximately to the minimum of L_J^*, i.e., the maximum of f_p. On the right is shown a corresponding Aplac simulation run using the circuit of Fig. 4.

Changes in coupling, e.g., that Z goes through critical coupling at -105 dBm, and sharpening of the resonance above P_c, are due to an increase of the internal Q-value Q_i from 20 up to several hundreds. Since $Q_i \simeq \omega_0 L_J^*/r$, and since L_J^* acquires a large effective value at a high drive $\gg 2\pi$ due to cancelling of positive and negative contributions, the supposed dissipation of r in series with the SSET has less effect at $P \gg P_c$.

The source of the dissipation modelled by the resistor r, probably situated in the SSET itself, is presently unknown, but it may be related to quasiparticle poisoning. It also limits the quality factor up to 20 approximately.

Also plotted in Fig. 9 is an Aplac simulation for the circuit. It presents a qualitative agreement with experiment and predicts roughly correctly the end of the linear regime of plasma resonance. However, in experiment the switch-

ing is markedly sharp, which we attribute to the effect of higher bands of the SSET [12].

ACKNOWLEDGMENTS

It is a pleasure to thank T. Heikkilä, G. Johansson, R. Lindell, H. Seppä, and J. Viljas for collaboration. This work was supported by the Academy of Finland and by the Large Scale Installation Program ULTI-3 of the European Union (Contract HPRI-1999-CT-00050).

REFERENCES

[1] Y. Nakamura, Yu. A. Pashkin, and J. S. Tsai, Coherent control of macroscopic quantum states in a single-Cooper-pair box, *Nature* **398**, 786 (1999).

[2] D. Vion *et al.*, Manipulating the Quantum State of an Electrical Circuit, *Science* **296**, 886 (2002).

[3] Y. Yu, S. Han, X. Chu, S. Chu, and Z. Wang, Coherent Temporal Oscillations of Macroscopic Quantum States in a Josephson Junction, *Science* **296**, 889 (2002).

[4] J. M. Martinis, S. Nam, J. Aumentado, and C. Urbina, Rabi Oscillations in a Large Josephson-Junction Qubit, *Phys. Rev. Lett.* **89**, 117901 (2002).

[5] R. J. Schoelkopf *et al.*, The Radio-Frequency Single-Electron Transistor (RF-SET): A Fast and Ultrasensitive Electrometer, *Science* **280**, 1238 (1998).

[6] M. A. Sillanpää, L. Roschier, and P. J. Hakonen, Inductive Single-Electron Transistor, *Phys. Rev. Lett.*, to appear (2004); cond-mat/0402045.

[7] A. B. Zorin, Radio-Frequency Bloch-Transistor Electrometer, *Phys. Rev. Lett.* **86**, 3388 (2001).

[8] M. A. Sillanpää *et al.*, to be published.

[9] A similar effect was recently observed by I. Siddiqi *et al.*, Direct Observation of Dynamical Switching between Two Driven Oscillation States of a Josephson Junction, cond-mat/0312553.

[10] L. Roschier and P. Hakonen, Design of cryogenic 700 MHz amplifier, *Cryogenics* **44**, 783 (2004).

[11] A. Aassime, G. Johansson, G, Wending, R. J. Schoelkopf, and P. Delsing, Radio-Frequency Single-Electron Transistor as Readout Device for Qubits: Charge Sensitivity and Backaction, *Phys. Rev. Lett.* **86**, 3376 (2001).

[12] In a more classical junction, the transition is less sharp; Mika A. Sillanpää, Leif Roschier, and Pertti J. Hakonen, Dynamics of the Inductive Single-Electron Transistor, submitted to *Proceedings of the Vth Rencontres de Moriond in Mesoscopic Physics* (2004).